REACH & RoHS COMPLIANT

＊所有原料材质,生产制程,电镀必须符合HF要求

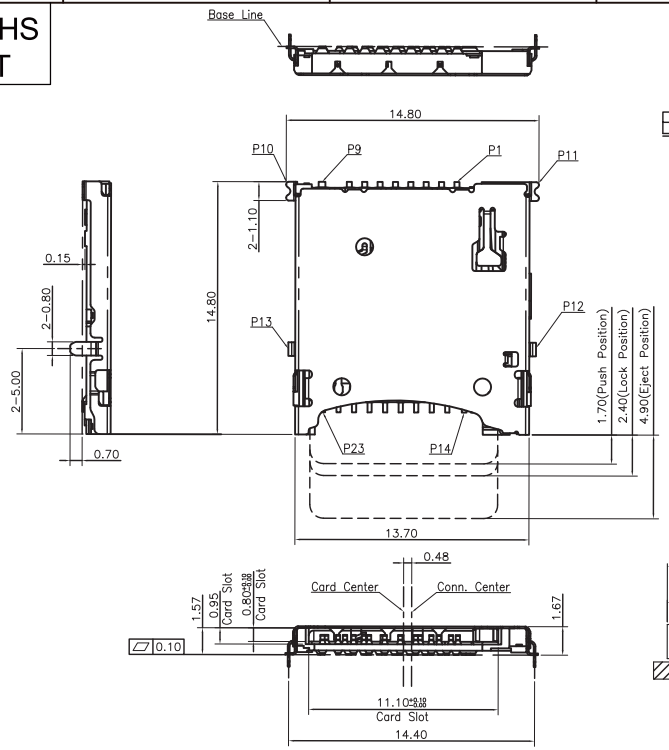


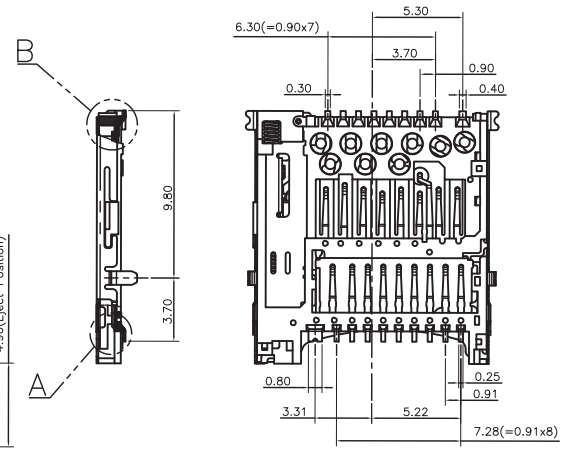


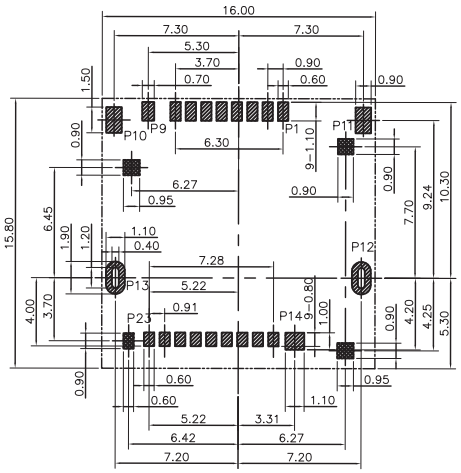


RECOMMEENDED P.C.B LAYOUT TOP VIEW(TOLERANCE+/-0.05)

PAD AREA

NO COMPONENT AREA

RED GLUING AREA

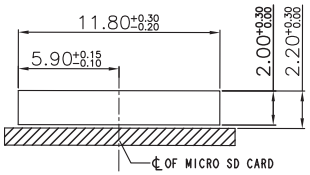


RECOMMEND ID DIMENSION

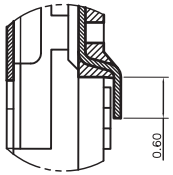


Detail A
Scale 4 : 1

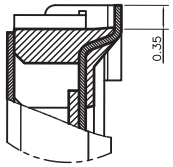


Detail B
Scale 4 : 1

NOTES:
(1) MATERIAL:
1-1.PLASTIC: LCP,THERMOPLASTIC UL 94V-0 COLOR: BLACK
1-2.CONTACT: COPPEER ALLOY.
1-3.SELL: STAINLESS STELL.
(2) PATING:
2-1.CONTACT:CONTACT AREA AU 1U".OVER NI 50U";SOLDER TAIL
AREA: MATTED TIN 100U"MIN, OVER NI 50".
2-2.SHELL:SOLDERABILITY OVER PLATING NI 50U" OVER ALL.
(3) CONTACT AND TAIL COPLANARITY TO BE 0.10MM MAX.

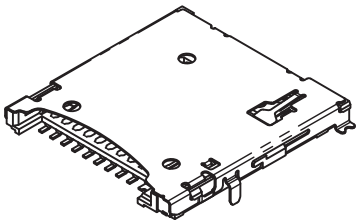

| Pin No. | Pin Assignment | Pin No. | Pin Assignment |
|---|---|---|---|
| P1 | Micro SD DAT2 | P12 | GND |
| P2 | Micro SD CD/DAT3 | P13 | GND |
| P3 | Micro SD CMD | P14 | GND |
| P4 | Micro SD VDD1 | P15 | Micro SD VDD2 |
| P5 | Micro SD CLK | P16 | Micro SD SWIO |
| P6 | Micro SD VSS | P17 | Micro SD VSS |
| P7 | Micro SD DAT0/RCLK+ | P18 | Micro SD D0+ |
| P8 | Micro SD DAT1/RCLK- | P19 | Micro SD D0- |
| P9 | Micro SD CD | P20 | Micro SD VSS |
| P10 | GND | P21 | Micro SD D1- |
| P11 | GND | P22 | Micro SD D1+ |
| | | P23 | Micro SD VSS |

| | Card Detect Switch |
|---|---|
| Card Uninsertion | Open |
| Card Half Insertion | Open |
| Card Insertion | Close |
| Open | Close |

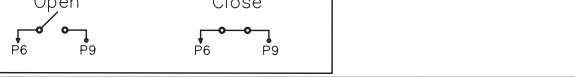


| | | | | | | |
|---|---|---|---|---|---|---|
| VOOHU 苏州沃虎电子科技有限公司 Su Zhou Voohu Electronic Tech.Co.Ltd | TITLE: MicroSD 4.0 H1.67push-push | SIZE A4 | UNITS MM[INCH] | GENERAL TOLERANCES UNLESS SPECIFIED | | APPROVED BY: Geoffrey.Song |
| | PART NO.: WHMC167-T1150-01 | SACLE 1:1 | REV A0 | x±0.35 | x°±3.0° | CHECKED BY: Elvis.Song |
| | | | | .x±0.30 | .x°±2.0° | |
| TEL: +86 400 1048 018 | WEB: WWW.WOHU-TEK.COM | REMARK: | SHEET 1/1 | .xx±0.25 | .xx°±1.5° | DESIGND BY: Sunny.Xu |
| | | | | .xxx±0.10 | .xxx°±1.0° | |